DRAWING MADE IN THIRD ANGLE PROJECTION
THIS DRAWING IS UNPUBLISHED. RELEASED FOR PUBLICATION ,19 .
© COPYRIGHT 19 BY AMP INCORPORATED. ALL INTERNATIONAL RIGHTS RESERVED.

LOC	DIST	P	F	ZONE	LTR	DESCRIPTION	DATE	APPD
AD	39				0	RELEASED PER PPR	3/8/93	BE

REVISIONS

1. SMT OR THRU-HOLE HEADER ASSY NOT SUPPLIED AND MUST BE ORDERED SEPERATELY. CONTACT AMP INCORPORATED FOR HEADER PART NUMBER
2. DATUMS AND BASIC DIMENSIONS ESTABLISHED BY CUSTOMER
3. FOR HEADER PC BOARD LAYOUT SEE APPROPRIATE HEADER ASSEMBLY

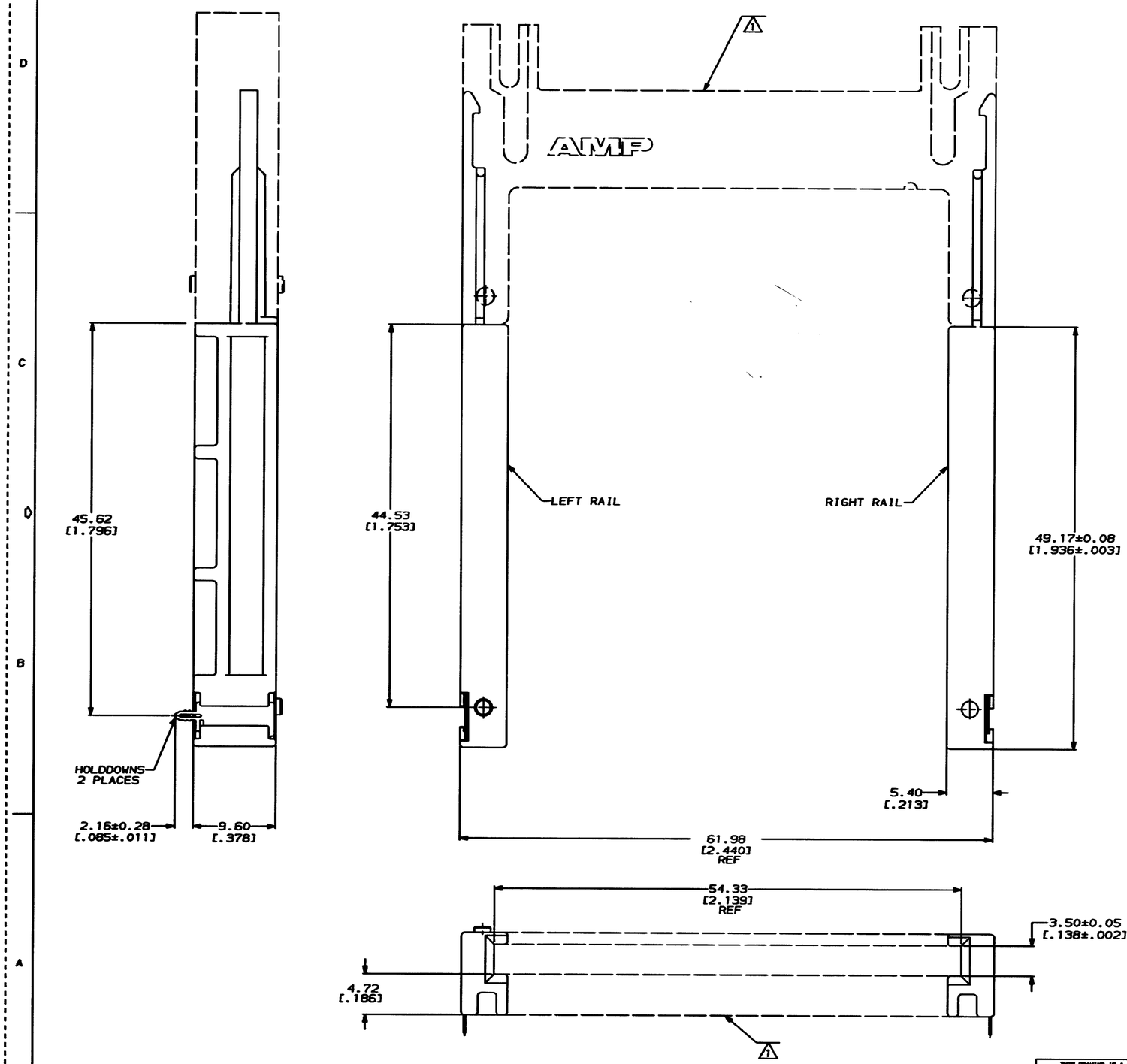

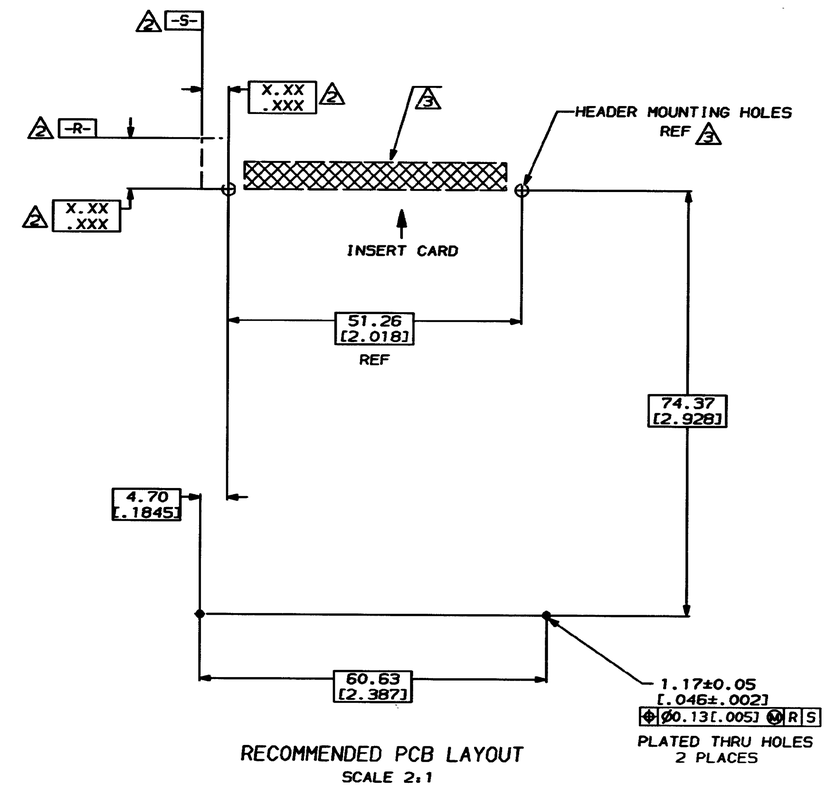

RECOMMENDED PCB LAYOUT
SCALE 2:1

DESCRIPTION	PART NO
RIGHT GUIDE RAIL WITH HOLDDOWN	535661-2
LEFT GUIDE RAIL WITH HOLDDOWN	535661-1

DO NOT SCALE PRINT.
UNLESS SPECIFIED
DIMENSIONS IN mm [INCHES]
TOLERANCES ON :
2 PLC DEC ±0.13 [.005]
3 PLC DEC ± -
ANGLES ± -

MATERIAL
RAIL: LCP - COLOR: BLACK
HOLD DOWNS: PHOSPHOR BRONZE

FINISH
HOLD DOWNS: TIN

DR 3/8/93 J MOSER
CHK 3/8/93 B ELICKER
APPD 3/8/93 B ELICKER
APPD 3/8/93 B FLINCHBAUGH
PRODUCT SPEC
APPLICATION SPEC
WEIGHT 2.6 GRAMS

AMP Incorporated
Harrisburg, PA 17105-3608

NAME
GUIDE RAILS, RAISED, EXTENDED, WITH THRU-HOLE HOLDDOWNS, AMP MEMORY CARD

SIZE D | CAGE CODE 00779 | DRAWING NO C-535661
SCALE 4:1 | SHEET 1 OF 1

CUSTOMER DRAWING

THIS DRAWING IS A CONTROLLED DOCUMENT FOR AMP INCORPORATED. IT IS SUBJECT TO CHANGE AND THE CONTROLLING ENGINEERING ORGANIZATION SHOULD BE CONTACTED FOR THE LATEST REVISION.

09 MAR 1993 08:41:22 amp25716 /home/sc026a/dept1321/amp25716/drawings/mchead